LPB-30S / LPB-30M / LPB-30L

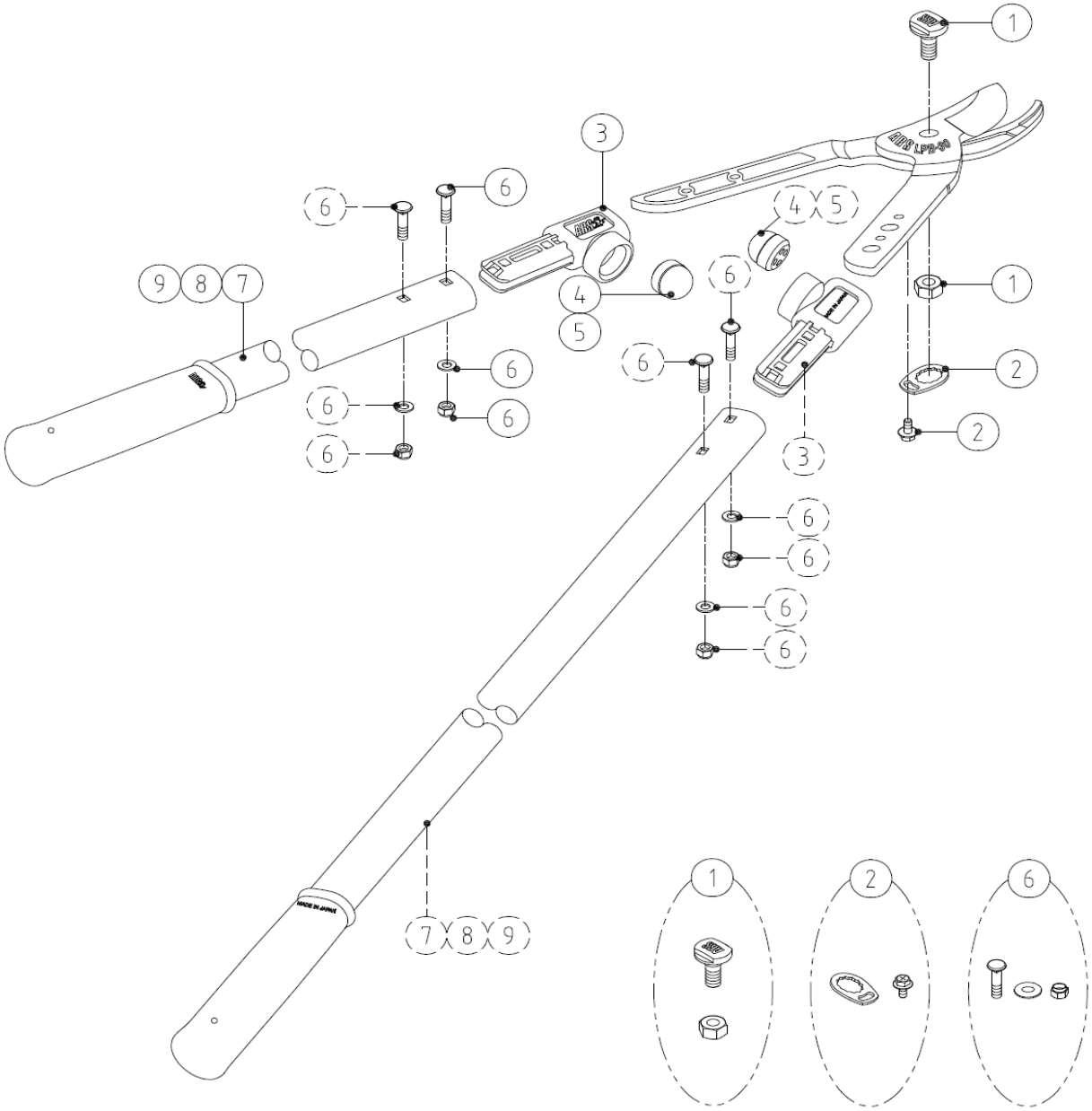

PARTS NO.	SPECIFICATION	PARTS NO.	SPECIFICATION
① SP-288	CENTRE BOLT & NUT FOR LPB SERIES		
② SP-426	SCREW RETAINER SET FOR LPB SERIES		
	& LPA-30L		
③ SP-419	BUMPER SOCKET FOR LPB SERIES (1PC)		
④ SP-420	SHOCK ABSORBER FOR LPB-20S/30S (1PC)		
⑤ SP-421	SHOCK ABSORBER FOR LPB-20M/L AND		
	LPB-30M/L (1PC)		
⑥ SP-387	BLADE HOLDING BOLT,NUT & WASHER FOR		
	LPA-30L AND LPB SERIES(/1PC)		
⑦ SP-422	PIPE WITH GRIP FOR LPB-20S/30S (1PC)		
⑧ SP-423	PIPE WITH GRIP FOR LPB-20M/30M (1PC)		
⑨ SP-389	PIPE WITH GRIP FOR LPA-30L & LPB-20L/30L		
	(1PC)		